RoHS Compliance

REV	SYM	Revision Record	Appr.	Date
V0	KLS19047	New Version Release	WuHao	2025-04-07

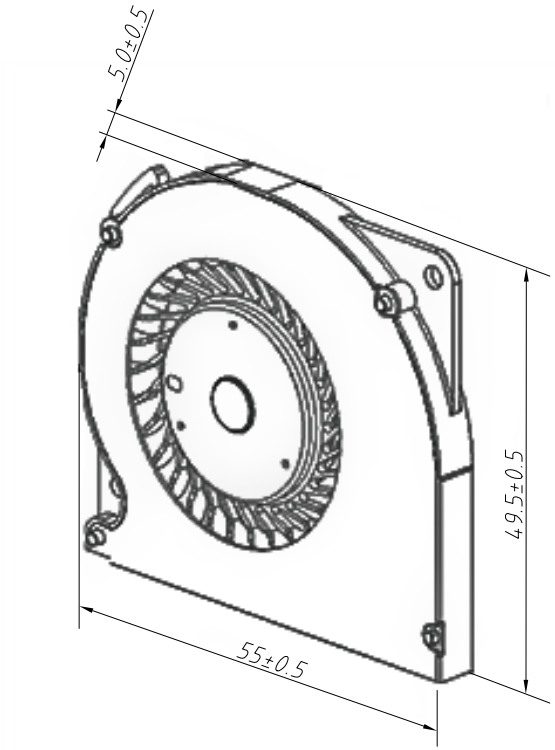

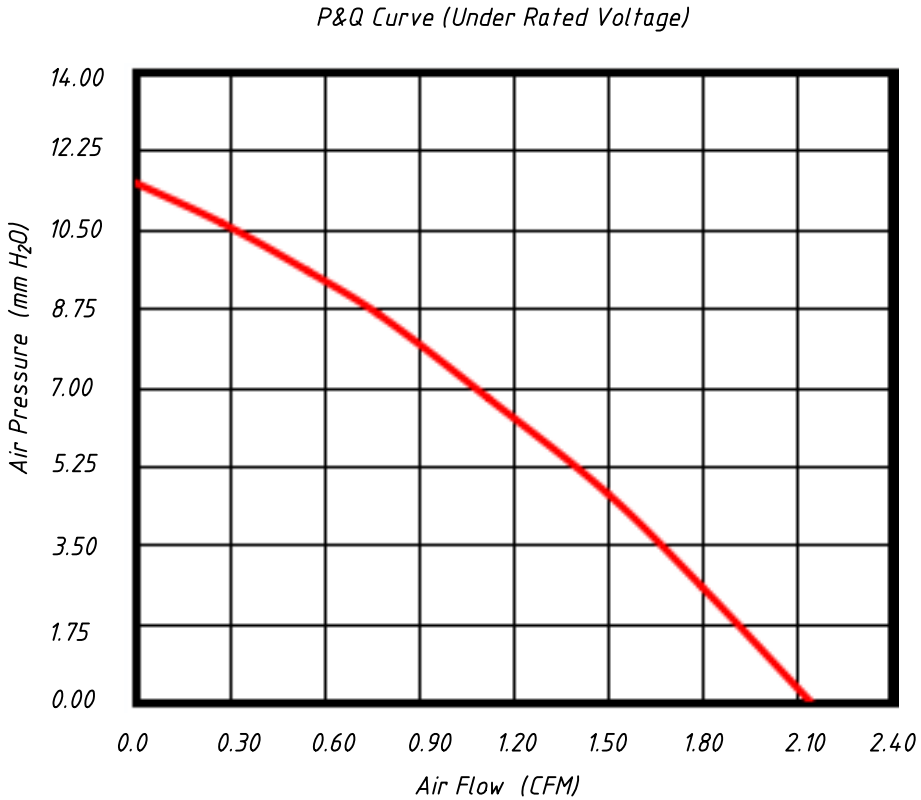

Bearing TYPE	Rated Voltage	Operating Voltage	Rated Current	Rated Inputpower	Speed	Maximum Air Flow		Maximum Air Pressure		Noise	Distance
	V DC	V DC	A MP	WATT	RPM	M^3/Min	CFM	mm H_2O	IN H_2O	dB (A)	m
HDB	5	3.5~5.5	0.28	1.40	5200	0.062	2.20	11.54	0.454	32.8	0.3

Material
Housing:Plastic, UL94V-0

Electric:
Insulation Impedance:10MΩ /DC 250V Min
Voltage Withstand Test:AC 500V 1s

ANGLE TOLERANCE	PROJECTION		Description:	
±3°			DC Fans	
GENERAL TOLERANCE	UNITS	mm	KLS P/N:	L-KLS22-LX-5505-LHD05
.x ±0.30	SHEET SIZE	A4		
.xx ±0.20	Draw:	WuHao	2025-04-07	NingBo KLS ELECTRONIC CO.,LTD.
.xxx ±0.10	Check:	Daniel	2025-04-07	